REVISION HISTORY			
REV	DESCRIPTION	DATE	AUTHOR
-	INITIAL		

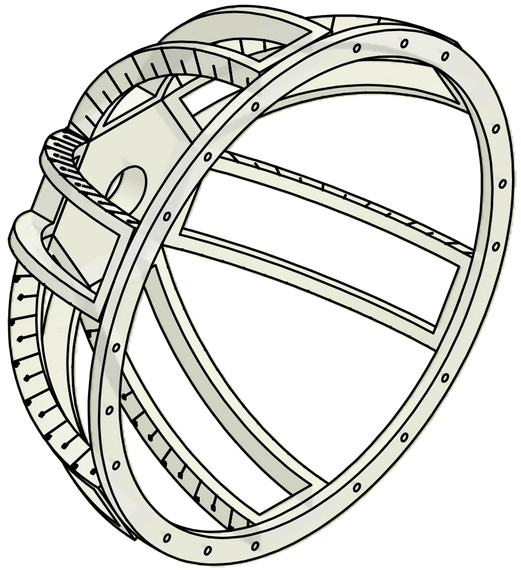

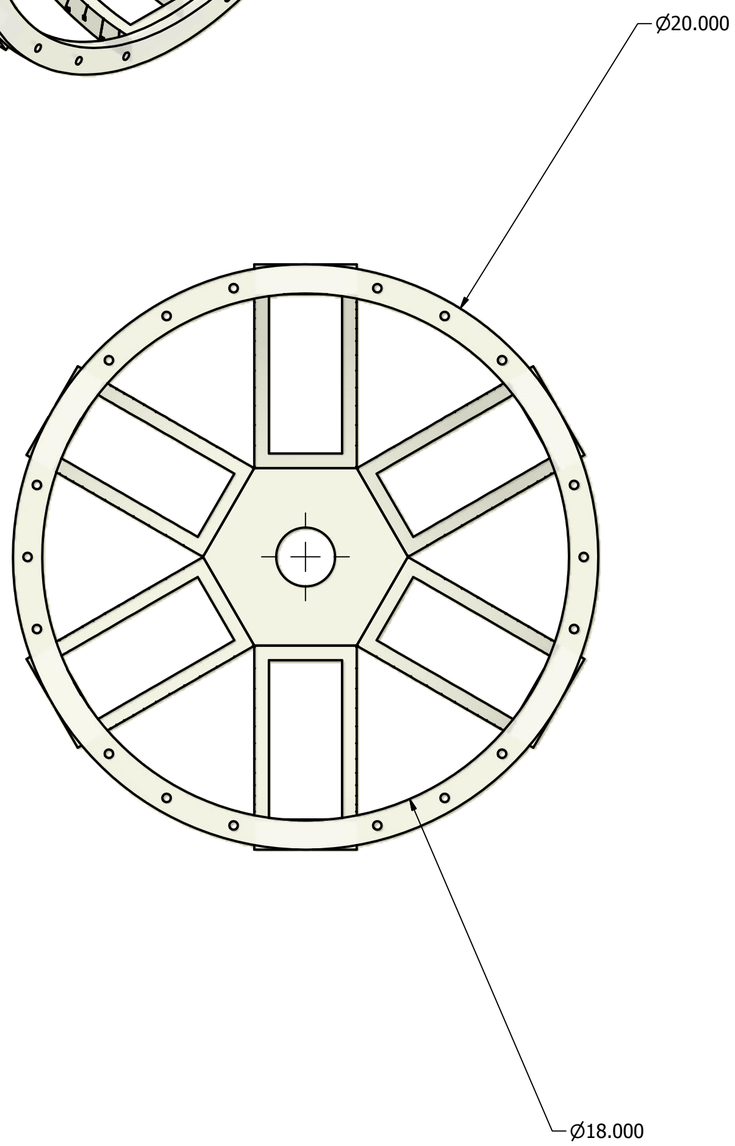

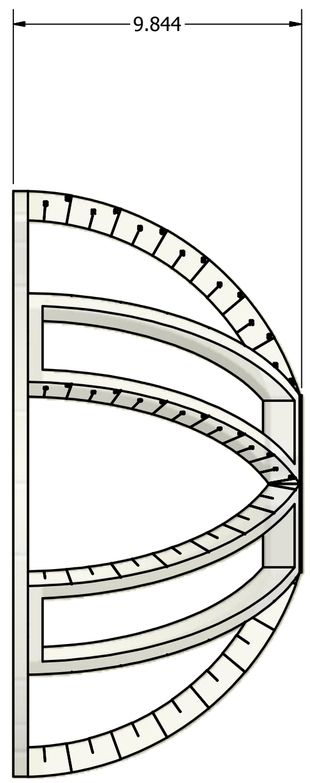

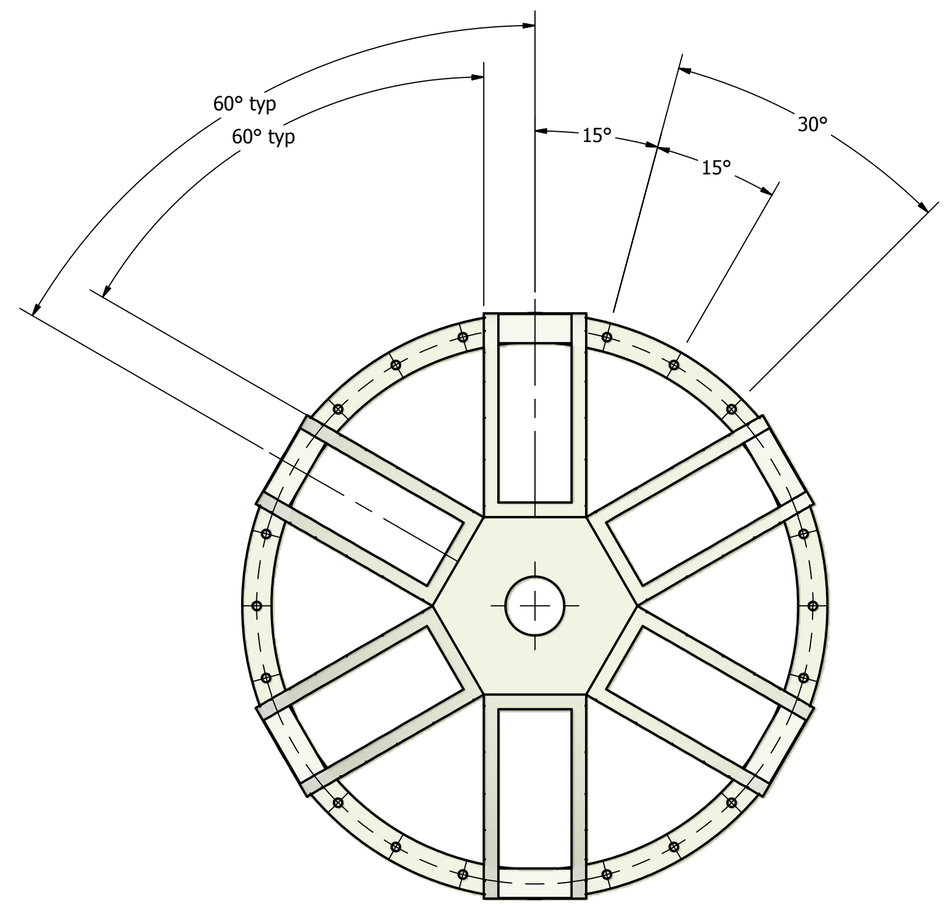

NOTES: UNLESS OTHERWISE SPECIFIED
1. INTERPRET DIMENSION AND TOLERANCES PER ASME Y14.5M-1994.
2. DEBURR AND BREAK ALL SHARP EDGES, MAX 0.010 UNLESS OTHERWISE INDICATED.
3. PARTS ARE TO BE CLEAN AND FREE OF OIL, GREASE, AND OTHER CONTAMINANTS.

TOLERANCES IN INCHES UNLESS OTHERWISE NOTED	
.X	± 0.03
X.XX	± 0.010
X.XXX	± 0.005
X.XXXX	± 0.0005
ANGULAR+/- 0.5 DEG	

DRAWN osbornej 9/9/2010

MATERIAL clear acrylic

FINISH

SURFACE TEXTURE 32

DIMENSIONS INCLUDE CHEMICALLY APPLIED FINISHES

THIS DRAWING IS NOT TO BE USED OR REPRODUCED WITHOUT PERMISSION FROM THE HOWARD HUGHES MEDICAL INSTITUTE

THIRD ANGLE PROJECTION:

HHMI
HOWARD HUGHES MEDICAL INSTITUTE

janelia farm research campus

DESCRIPTION: 16 inch ball treadmill assembly

SIZE C | PART NO JF-AT-TM0006 | REV

MODEL FILE 16 inch ball treadmill assembly.iam

SHEET 1 OF 1